Work Order ID 73131

Friday, August 26, 2011 6:47:15 AM

Item ID: D206-642-541 **Accept** **Setup Start**

Revision ID: **Stop**

Item Name: Replacement Skidtube

Start Date: 8/26/2011 **Start Qty:** 1.00 **Cust Item ID:**

Required Date: 9/9/2011 **Req'd Qty:** 1.00 **Customer:**

Reference:

Approvals: **Process Plan:** MLF **Date:** 11-08-29 **Tooling:** **Date:** **Run Start**

QC: **Date:** **SPC (Y/N):** **Date:** **Stop**

Sequence ID/ Work Center ID	Operation Description	Set Up/ Run Hours	Tool ID	Tool #	Plan Code	Accept Qty	Reject Qty	Reject Number	Insp. Stamp
Draw Nbr / Revision Nbr									
~~D3274~~ ~~D~~ / D3274	Rev. D. MF.								
IIN-D206-642 / Rev M									
100		0.00							
DC	DOCUMENT CONTROL								
Document Control	**Memo**	0.00							
	Photocopy bluefile & type labels per PPP D206-642-541		CHG003						

N/A

Dart Aerospace Ltd

W/O:		WORK ORDER CHANGES					
DATE	STEP	PROCEDURE CHANGE	By	Date	Qty	Approval Chief Eng / Prod Mgr	Approval QC Inspector

Part No: _____ **PAR #:** _____ **Fault Category:** _____ **NCR:** Yes No **DQA:** _____ **Date:** _____

Resolution: _____ **Disposition:** _____ **QA: N/C Closed:** _____ **Date:** _____

NCR:		WORK ORDER NON-CONFORMANCE (NCR)						
DATE	STEP	Description of NC Section A	Corrective Action Section B			Verification Section C	Approval Chief Eng	Approval QC Inspector
			Initial Chief Eng	Action Description Chief Eng	Sign & Date			

NOTE: Date & initial all entries

H:\fFORMS\Quality Assurance\approved QA\NCRWO RevE

Work Order ID 73131

Friday, August 26, 2011 6:47:15 AM

Item ID: D206-642-541 **Accept** **Setup Start**

Revision ID: **Stop**

Item Name: Replacement Skidtube

Start Date: 8/26/2011 **Start Qty:** 1.00 **Cust Item ID:**

Required Date: 9/9/2011 **Req'd Qty:** 1.00 **Customer:**

Reference:

Approvals: **Process Plan:** _____ **Date:** _____ **Tooling:** _____ **Date:** _____ **Run Start**

QC: _____ **Date:** _____ **SPC (Y/N):** _____ **Date:** _____ **Stop**

Sequence ID/ Work Center ID	Operation Description	Set Up/ Run Hours	Tool ID	Tool #	Plan Code	Accept Qty	Reject Qty	Reject Number	Insp. Stamp
110		0.00							
Skidtubes	Skidtubes								
	Memo	0.00							

Skidtubes

****VERIFY AND INSPECT THE MATERIAL PRIOR TO USE****

1- Bend FWD end of tube using bend prog D3274 FWD and foilo 10 as per dwg D3274, cut fwd end of tube with saw table setup D3274. BE 11/09/06

2- remove fwd indexing ridge as per dwg D3274. Prepare for welding BE 11/09/12

3- weld fwd cap as per dwg D3274 and QSI004
AR Aluminum Rod Batch: M12660 BE 11/09/12

4- grind fwd cap weld on top surface only BE 11/09/12

5- Cut AFT end of tube at 170.9" as per dwg D3274 and deburr end.

6-Drill Aft cap pilot hole using DT8025

7 -Cleco DT8025 in position and install pilot hole drill Jig DT8742A,B,C,D. Drill 3/16" pilot holes as per Dwg D3274

8 -Remove inner indexing ridge on aft end of skidtube as per Dwg D3274 scribe batch #

9 -Open aft end cap holes to Ø0.208" as per Dwg D3274. Deburr aft end.

BE 11/09/12

Dart Aerospace Ltd

W/O:		WORK ORDER CHANGES					
DATE	STEP	PROCEDURE CHANGE	By	Date	Qty	Approval Chief Eng / Prod Mgr	Approval QC Inspector

Part No: _____ **PAR #:** _____ **Fault Category:** _____ **NCR:** Yes No **DQA:** _____ **Date:** _____

Resolution: _____ **Disposition:** _____ **QA: N/C Closed:** _____ **Date:** _____

NCR:		WORK ORDER NON-CONFORMANCE (NCR)						
DATE	STEP	Description of NC Section A	Corrective Action Section B			Verification Section C	Approval Chief Eng	Approval QC Inspector
			Initial Chief Eng	Action Description Chief Eng	Sign & Date			

NOTE: Date & initial all entries

H:\fFORMS\Quality Assurance\approved QA\NCRWO RevE

Work Order ID 73131

Friday, August 26, 2011 6:47:15 AM

Item ID: D206-642-541 **Accept** **Setup Start** **Stop**

Revision ID:

Item Name: Replacement Skidtube

Start Date: 8/26/2011 **Start Qty:** 1.00 **Cust Item ID:**

Required Date: 9/9/2011 **Req'd Qty:** 1.00 **Customer:**

Reference:

Approvals: **Process Plan:** _____ **Date:** _____ **Tooling:** _____ **Date:** _____ **Run Start** **Stop**

QC: _____ **Date:** _____ **SPC (Y/N):** _____ **Date:** _____

Sequence ID/ Work Center ID	Operation Description	Set Up/ Run Hours	Tool ID	Tool #	Plan Code	Accept Qty	Reject Qty	Reject Number	Insp. Stamp
114 QC Quality Control	QC5- Inspect part completeness to step on W/O **Memo**	0.00 0.00	S 11/04/13						
116 QC Quality Control	QC10- Inspect visual per QSI004- ground welds **Memo**	0.00 0.00	S 11/04/13			(+1)			
120 HandFinish Hand Finishing	Chemical Conversion Coat per QSI005 4.1 **Memo**	0.00 0.00	JW MD		11-09-13				

Dart Aerospace Ltd

W/O:		WORK ORDER CHANGES					
DATE	STEP	PROCEDURE CHANGE	By	Date	Qty	Approval Chief Eng / Prod Mgr	Approval QC Inspector

Part No: _____ **PAR #:** _____ **Fault Category:** _____ **NCR:** Yes No **DQA:** _____ **Date:** _____

Resolution: _____ **Disposition:** _____ **QA: N/C Closed:** _____ **Date:** _____

NCR:		WORK ORDER NON-CONFORMANCE (NCR)						
DATE	STEP	Description of NC Section A	Corrective Action Section B			Verification Section C	Approval Chief Eng	Approval QC Inspector
			Initial Chief Eng	Action Description Chief Eng	Sign & Date			

NOTE: Date & initial all entries

H:\FORMS\Quality Assurance\approved QA\NCRWO RevE

Work Order ID 73131

Friday, August 26, 2011 6:47:15 AM

Item ID: D206-642-541 **Accept** **Setup Start**

Revision ID: **Stop**

Item Name: Replacement Skidtube

Start Date: 8/26/2011 **Start Qty:** 1.00 **Cust Item ID:**

Required Date: 9/9/2011 **Req'd Qty:** 1.00 **Customer:**

Reference:

Run Start

Approvals: **Process Plan:** _____ **Date:** _____ **Tooling:** _____ **Date:** _____

Stop

QC: _____ **Date:** _____ **SPC (Y/N):** _____ **Date:** _____

Sequence ID/ Work Center ID	Operation Description	Set Up/ Run Hours	Tool ID	Tool #	Plan Code	Accept Qty	Reject Qty	Reject Number	Insp. Stamp
130	QC3- Inspect Part Finish	0.00				1	0		BE 11/09/14
QC	**Memo**	0.00							
Quality Control									
150	Skidtubes	0.00				x1			11/09/14
Skidtubes	**Memo**	0.00							
Skidtubes	1-Open Ø0.313" and 0.375" crossbolt spacer holes as per Dwg D3274 2-Deburr crossbolt spacer holes as per Dwg D3274 and blow out chips from inside the tube 3-Bond web in place as per Dwg D3274 & QSI 015. A/R□□Sikaflex-291□ 118393 □□ Sikaflex expire date:□ 12/04/05 □ Start:□ 11/09/14 □Time:□ 11:30 □ Finish:□ 11/09/22 □Time:□ 4:00 (Adhere for 12 hours)								

Dart Aerospace Ltd

W/O:		WORK ORDER CHANGES					
DATE	STEP	PROCEDURE CHANGE	By	Date	Qty	Approval Chief Eng / Prod Mgr	Approval QC Inspector

Part No: _____ **PAR #:** _____ **Fault Category:** _____ **NCR:** Yes No **DQA:** _____ **Date:** _____

Resolution: _____ **Disposition:** _____ **QA: N/C Closed:** _____ **Date:** _____

NCR:		WORK ORDER NON-CONFORMANCE (NCR)						
DATE	STEP	Description of NC Section A	Corrective Action Section B			Verification Section C	Approval Chief Eng	Approval QC Inspector
			Initial Chief Eng	Action Description Chief Eng	Sign & Date			

NOTE: Date & initial all entries

H:\fFORMS\Quality Assurance\approved QA\NCRWO RevE

Work Order ID 73131

Friday, August 26, 2011 6:47:15 AM

Item ID: D206-642-541 **Accept** **Setup Start**

Revision ID: **Stop**

Item Name: Replacement Skidtube

Start Date: 8/26/2011 **Start Qty:** 1.00 **Cust Item ID:**

Required Date: 9/9/2011 **Req'd Qty:** 1.00 **Customer:**

Reference:

Run Start

Approvals: **Process Plan:** _____ **Date:** _____ **Tooling:** _____ **Date:** _____

Stop

QC: _____ **Date:** _____ **SPC (Y/N):** _____ **Date:** _____

Sequence ID/ Work Center ID	Operation Description	Set Up/ Run Hours	Tool ID	Tool #	Plan Code	Accept Qty	Reject Qty	Reject Number	Insp. Stamp
160	QC5- Inspect part completeness to step on W/O.	0.00							
QC	**Memo**	0.00							
Quality Control									
170		0.00							
Skidtubes	Skidtubes								
Skidtubes	**Memo**	0.00							

1-Bend AFT end of tube using bend prog. D3274 AFT as per dwg D3274. Install drop pins in crossbolt spacer holes to maintain web position.

2- DRILL PILOT HOLES FOR WEARPLATES USING D3274-1T2
OPEN HOLES TO .297" . Deburr

3-DRILL TOE PIN HOLE .640" DIA AS PER DWG USING DT8935 FWD END OF TUBE
DEBURR INSIDE OF HOLE AS NECESSARY (DO NOT ENLARGE HOLES)
REMOVE ANY FOREIGN OBJECTS INSIDE OF TUBES

4- Countersink crossbolt spacer holes as per Dwg D3274

5- prepare for welding

DP 11-9-20

DP 11-9-20

SAD 11-09-21

Dart Aerospace Ltd

W/O:		WORK ORDER CHANGES					
DATE	STEP	PROCEDURE CHANGE	By	Date	Qty	Approval Chief Eng / Prod Mgr	Approval QC Inspector

Part No: _____ **PAR #:** _____ **Fault Category:** _____ **NCR:** Yes No **DQA:** _____ **Date:** _____

Resolution: _____ **Disposition:** _____ **QA: N/C Closed:** _____ **Date:** _____

NCR:		WORK ORDER NON-CONFORMANCE (NCR)						
DATE	STEP	Description of NC Section A	Corrective Action Section B			Verification Section C	Approval Chief Eng	Approval QC Inspector
			Initial Chief Eng	Action Description Chief Eng	Sign & Date			

NOTE: Date & initial all entries

H:\fFORMS\Quality Assurance\approved QA\NCRWO RevE

Work Order ID 73131

Friday, August 26, 2011 6:47:15 AM

Item ID: D206-642-541 **Accept** **Setup Start** **Stop**

Revision ID:

Item Name: Replacement Skidtube

Start Date: 8/26/2011 **Start Qty:** 1.00 **Cust Item ID:**

Required Date: 9/9/2011 **Req'd Qty:** 1.00 **Customer:**

Reference:

Run Start **Stop**

Approvals: **Process Plan:** _____ **Date:** _____ **Tooling:** _____ **Date:** _____

QC: _____ **Date:** _____ **SPC (Y/N):** _____ **Date:** _____

Sequence ID/ Work Center ID	Operation Description	Set Up/ Run Hours	Tool ID	Tool #	Plan Code	Accept Qty	Reject Qty	Reject Number	Insp. Stamp
180	QC5- Inspect part completeness to step on W/O	0.00 3.1" 4.9°				1	Ø		BE 11/09/22
QC	**Memo**	0.00							
Quality Control									
190		0.00							
Skidtubes	Skidtubes					1	Ø		
Skidtubes	**Memo**	0.00							

1-Insert D2649 & D3275-1 crossbolt spacers. Weld as per QSI 004 and Dwg D3274. Remember to back drill each hole before welding the other side. Use aluminum rod
A/R☐☐Aluminum Rod☐ 117884 11.09.28

3-Grind cross bolt welds flush as per Dwg D3274. BB 11/09/28

4-Counterbore 5/16" x 0.750" deep as per Dwg D3274 and deburr. DD 11-9-29

Dart Aerospace Ltd

W/O:		WORK ORDER CHANGES					
DATE	STEP	PROCEDURE CHANGE	By	Date	Qty	Approval Chief Eng / Prod Mgr	Approval QC Inspector

Part No: _____ **PAR #:** _____ **Fault Category:** _____ **NCR:** Yes No **DQA:** _____ **Date:** _____

Resolution: _____ **Disposition:** _____ **QA: N/C Closed:** _____ **Date:** _____

NCR:		WORK ORDER NON-CONFORMANCE (NCR)						
DATE	STEP	Description of NC Section A	Corrective Action Section B			Verification Section C	Approval Chief Eng	Approval QC Inspector
			Initial Chief Eng	Action Description Chief Eng	Sign & Date			

NOTE: Date & initial all entries

H:\FORMS\Quality Assurance\approved QA\NCRWO RevE

Work Order ID 73131

Friday, August 26, 2011 6:47:15 AM

Item ID: D206-642-541 **Accept** **Setup Start**

Revision ID: **Stop**

Item Name: Replacement Skidtube

Start Date: 8/26/2011 **Start Qty:** 1.00 **Cust Item ID:**

Required Date: 9/9/2011 **Req'd Qty:** 1.00 **Customer:**

Reference:

Approvals: **Process Plan:** _____ **Date:** _____ **Tooling:** _____ **Date:** _____ **Run Start**

QC: _____ **Date:** _____ **SPC (Y/N):** _____ **Date:** _____ **Stop**

Sequence ID/ Work Center ID	Operation Description	Set Up/ Run Hours	Tool ID	Tool #	Plan Code	Accept Qty	Reject Qty	Reject Number	Insp. Stamp
200	QC5- Inspect part completeness to step on W/O	0.00							
QC	Memo	0.00							
Quality Control									
210	QC10- Inspect visual per QSI004- ground welds	0.00							
QC	Memo	0.00							
Quality Control									
220	Pressure Wash per QSI005 4.3	0.00							
HandFinish	Memo	0.00							
Hand Finishing	Re-alodine tube as per QSI 005 section 4.1.2.1 do not acid etch								

Dart Aerospace Ltd

W/O:		WORK ORDER CHANGES					
DATE	STEP	PROCEDURE CHANGE	By	Date	Qty	Approval Chief Eng / Prod Mgr	Approval QC Inspector

Part No: _____ **PAR #:** _____ **Fault Category:** _____ **NCR:** Yes No **DQA:** _____ **Date:** _____

Resolution: _____ **Disposition:** _____ **QA: N/C Closed:** _____ **Date:** _____

NCR:		WORK ORDER NON-CONFORMANCE (NCR)						
DATE	STEP	Description of NC Section A	Corrective Action Section B			Verification Section C	Approval Chief Eng	Approval QC Inspector
			Initial Chief Eng	Action Description Chief Eng	Sign & Date			

NOTE: Date & initial all entries

H:\fFORMS\Quality Assurance\approved QA\NCRWO RevE

Work Order ID 73131

Friday, August 26, 2011 6:47:15 AM

Item ID: D206-642-541 **Accept** **Setup Start**

Revision ID: **Stop**

Item Name: Replacement Skidtube

Start Date: 8/26/2011 **Start Qty:** 1.00 **Cust Item ID:**

Required Date: 9/9/2011 **Req'd Qty:** 1.00 **Customer:**

Reference:

Run Start **Stop**

Approvals: **Process Plan:** _____ **Date:** _____ **Tooling:** _____ **Date:** _____

QC: _____ **Date:** _____ **SPC (Y/N):** _____ **Date:** _____

Sequence ID/ Work Center ID	Operation Description	Set Up/ Run Hours	Tool ID	Tool #	Plan Code	Accept Qty	Reject Qty	Reject Number	Insp. Stamp
230	White Gloss(Ref:4.3.5.1) per QSI005 4.3-Alum	0.00							
Powdercoat									
Powder Coating	**Memo** START TIME: 3:15 OVEN TEMPERATURE: 320 °F FINISH TIME: 3:45	0.00							
M118439									
240	QC3- Inspect Part Finish	0.00							
QC									
Quality Control	**Memo**	0.00							
250	HandFinishing	0.00							
HandFinish									
Hand Finishing	**Memo**	0.00							

1-Install Nut Plate as per Dwg D3274. Apply LPS-3 to Nut Plate and rivets.
A/R☐N/A☐LPS-3☐ 114596.

2-Install inserts as per Dwg D3274. Use a drop of Sikaflex inside insert holes a
A/R☐☐Sikaflex-291 ☐ ☐ 118595.
Sikaflex expire date: ☐ 125.

Dart Aerospace Ltd

W/O:		WORK ORDER CHANGES					
DATE	STEP	PROCEDURE CHANGE	By	Date	Qty	Approval Chief Eng / Prod Mgr	Approval QC Inspector

Part No: _____ **PAR #:** _____ **Fault Category:** _____ **NCR:** Yes No **DQA:** _____ **Date:** _____

Resolution: _____ **Disposition:** _____ **QA: N/C Closed:** _____ **Date:** _____

NCR:		WORK ORDER NON-CONFORMANCE (NCR)						
DATE	STEP	Description of NC Section A	Corrective Action Section B			Verification Section C	Approval Chief Eng	Approval QC Inspector
			Initial Chief Eng	Action Description Chief Eng	Sign & Date			

NOTE: Date & initial all entries

H:\fFORMS\Quality Assurance\approved QA\NCRWO RevE

Work Order ID 73131

Friday, August 26, 2011 6:47:15 AM

Item ID: D206-642-541 **Accept** **Setup Start** **Stop**

Revision ID:

Item Name: Replacement Skidtube

Start Date: 8/26/2011 **Start Qty:** 1.00 **Cust Item ID:**

Required Date: 9/9/2011 **Req'd Qty:** 1.00 **Customer:**

Reference:

Run Start **Stop**

Approvals: **Process Plan:** _____ **Date:** _____ **Tooling:** _____ **Date:** _____

QC: _____ **Date:** _____ **SPC (Y/N):** _____ **Date:** _____

Sequence ID/ Work Center ID	Operation Description	Set Up/ Run Hours	Tool ID	Tool #	Plan Code	Accept Qty	Reject Qty	Reject Number	Insp. Stamp
260	QC5- Inspect part completeness to step on W/O	0.00							
QC	**Memo**	0.00							
Quality Control	Inspect Nut Plate & Inserts								
270		0.00							
HandFinish	HAND FINISHING RESOURCE #1								
Hand Finishing	**Memo**	0.00							

S 11/10/04

(4)

1 BR 11-9-4.

1-Install wearpads & gaskets as per Dwg D3274.

2-Install ring as per Dwg D3274
A/R□□Sikaflex-291 □118393 □□
Sikaflex expire date: □12-5.

3-Inspect for foreign objects as per QSI 024

4-Spray inside of tube on both sides of web with LPS-3
A/R LPS-3 Batch: N/A

5-Install Aft Cap and seal with Sikaflex. Clean excess adhesive.
A/R□□Sikaflex-291 □118393 □□
Sikaflex expire date: □12-5

PROC VON. ⓜ 114596.

Dart Aerospace Ltd

W/O:		WORK ORDER CHANGES					
DATE	STEP	PROCEDURE CHANGE	By	Date	Qty	Approval Chief Eng / Prod Mgr	Approval QC Inspector

Part No: _____ **PAR #:** _____ **Fault Category:** _____ **NCR:** Yes No **DQA:** _____ **Date:** _____

Resolution: _____ **Disposition:** _____ **QA: N/C Closed:** _____ **Date:** _____

NCR:		WORK ORDER NON-CONFORMANCE (NCR)						
DATE	STEP	Description of NC Section A	Corrective Action Section B			Verification Section C	Approval Chief Eng	Approval QC Inspector
			Initial Chief Eng	Action Description Chief Eng	Sign & Date			

NOTE: Date & initial all entries

H:\fFORMS\Quality Assurance\approved QA\NCRWO RevE

Work Order ID 73131

Friday, August 26, 2011 6:47:15 AM

Item ID: D206-642-541 **Accept** **Setup Start** **Stop**

Revision ID:

Item Name: Replacement Skidtube

Start Date: 8/26/2011 **Start Qty:** 1.00 **Cust Item ID:**

Required Date: 9/9/2011 **Req'd Qty:** 1.00 **Customer:**

Reference:

Run Start **Stop**

Approvals: **Process Plan:** _____ **Date:** _____ **Tooling:** _____ **Date:** _____

QC: _____ **Date:** _____ **SPC (Y/N):** _____ **Date:** _____

Sequence ID/ Work Center ID	Operation Description	Set Up/ Run Hours	Tool ID	Tool #	Plan Code	Accept Qty	Reject Qty	Reject Number	Insp. Stamp
280	QC5- Inspect part completeness to step on W/O	0.00							
QC	Memo	0.00							
Quality Control									
290	Identify as per dwg & Stock Location:_____	0.00							
Packaging	Memo	0.00							
Packaging									
300	QC21- Final Inspection - Work Order Release	0.00							
QC	Memo	0.00							
Quality Control									

8 11/10/04

PP 73118

11/10/5

11/10/5

11/10/05

Dart Aerospace Ltd

W/O:		WORK ORDER CHANGES					
DATE	STEP	PROCEDURE CHANGE	By	Date	Qty	Approval Chief Eng / Prod Mgr	Approval QC Inspector

Part No: _____ **PAR #:** _____ **Fault Category:** _____ **NCR:** Yes No **DQA:** _____ **Date:** _____

Resolution: _____ **Disposition:** _____ **QA: N/C Closed:** _____ **Date:** _____

NCR:		WORK ORDER NON-CONFORMANCE (NCR)						
DATE	STEP	Description of NC Section A	Corrective Action Section B			Verification Section C	Approval Chief Eng	Approval QC Inspector
			Initial Chief Eng	Action Description Chief Eng	Sign & Date			

NOTE: Date & initial all entries

H:\fFORMS\Quality Assurance\approved QA\NCRWO RevE

Picklist Print

Friday, August 26, 2011 6:47:10 AM

8

Work Order ID: 73131

Parent Item: D206-642-541

Parent Item Name: Replacement Skidtube

Start Date: 8/26/2011 **Required Date:** 9/9/2011

Start Qty: 1.00 **Required Qty:** 1.00

Comments:
IPP Rev:B□05.09.23□Revised per D206-642 Rev. J□KJ/JLM
IPP Rev:C 07-02-23 Added SS Wearplates & Gaskets JLM□
IPP Rev:D 07-12-06 replace NAS1515H3L to D3672-1 DD
IPP Rev:E 08-04-17 as per PAR 08-015 DD verified by:EC
IPP Rev:F 08-06-02 add comment DD verified by:EC
IPP Rev:G 08-10-09 revise details DD verified byEC

Component Item ID/ Item Name	Replacement Item ID	Mfg/ Purch	Bin Item	Primary Location	Last Location	Route Seq ID	Unit of Measure	Qty on Hand	Qty per Kit	Total Qty	Qty Issued	Date Issued	Status
D2600-1-190		Manufactured	No			110	Each	81.4000	1	1		BC 11/09/06	
Extrusion Round 3" 206													
				Location		**Loc Qty**		**Loc Code**					
				HALL		81.4							
					59874	22.4				1			
					69622	59							
D3285-1		Manufactured	No			110	Each	92.0000	1	1		BC 11/09/12	
Cap													
				Location		**Loc Qty**		**Loc Code**					
				LG002		92							
					52511	45				1			
					52647	47							
D3282-041		Manufactured	No			150	Each	2.0000	1	1		DL 11/09/11	
Float Web (206L/407)													
				Location		**Loc Qty**		**Loc Code**					
				LG		2							
					69714	2							
					72838					1			

Dart Aerospace Ltd

W/O:		WORK ORDER CHANGES					
DATE	STEP	PROCEDURE CHANGE	By	Date	Qty	Approval Chief Eng / Prod Mgr	Approval QC Inspector

Part No: _____ **PAR #:** _____ **Fault Category:** _____ **NCR:** Yes No **DQA:** _____ **Date:** _____

Resolution: _____ **Disposition:** _____ **QA: N/C Closed:** _____ **Date:** _____

NCR:		WORK ORDER NON-CONFORMANCE (NCR)						
DATE	STEP	Description of NC Section A	Corrective Action Section B			Verification Section C	Approval Chief Eng	Approval QC Inspector
			Initial Chief Eng	Action Description Chief Eng	Sign & Date			

NOTE: Date & initial all entries

H:\fFORMS\Quality Assurance\approved QA\NCRWO RevE

Picklist Print

Friday, August 26, 2011 6:47:11 AM

Work Order ID: 73131

Parent Item: D206-642-541

Parent Item Name: Replacement Skidtube

Start Date: 8/26/2011 **Required Date:** 9/9/2011

Start Qty: 1.00 **Required Qty:** 1.00

D2649	Manufactured	No	190	Each	46.0000	12	12	11·09·28 ~~BC 11/08/22~~ ~~B 73390~~ 12
Cross Bolt Spacer								

Location	Loc Qty	Loc Code	
LG B73851	34		12
68224	2		
71355	2		
72704	30		
LG001	12		
65317	1		
68507	11		

D3275-1	Manufactured	No	190	Each	280.0000	12	12	11·09·28 ~~BC 11/08/22~~ ~~B 72123~~ 12
Crossbolt Spacer								

Location	Loc Qty	Loc Code	
LG	161		12
72123	161		
LG002	119		
66930	106		
68946	13		

CR3212-4-03	Purchased	No	250	Each	1,158.000	2	2	BR 11·10·4
Cherry Rivet								

Location	Loc Qty	Loc Code	
FP-B	2		
110139	2		
ST311	1156		
114859 ✓	1156		2.

Dart Aerospace Ltd

W/O:		WORK ORDER CHANGES					
DATE	STEP	PROCEDURE CHANGE	By	Date	Qty	Approval Chief Eng / Prod Mgr	Approval QC Inspector

Part No: _____ **PAR #:** _____ **Fault Category:** _____ **NCR:** Yes No **DQA:** _____ **Date:** _____

Resolution: _____ **Disposition:** _____ **QA: N/C Closed:** _____ **Date:** _____

NCR:		WORK ORDER NON-CONFORMANCE (NCR)						
DATE	STEP	Description of NC Section A	Corrective Action Section B			Verification Section C	Approval Chief Eng	Approval QC Inspector
			Initial Chief Eng	Action Description Chief Eng	Sign & Date			

NOTE: Date & initial all entries

H:\FORMS\Quality Assurance\approved QA\NCRWO RevE

Picklist Print

Friday, August 26, 2011 6:47:11 AM

Work Order ID: 73131

Parent Item: D206-642-541

Parent Item Name: Replacement Skidtube

Start Date: 8/26/2011 **Required Date:** 9/9/2011

Start Qty: 1.00 **Required Qty:** 1.00

D3415-041	Manufactured	No	250	Each	50.0000	1	1		BR 11-10-4.
Nut Plate									

Location		Loc Qty	Loc Code	
ST053		50		
	33842	6		
	67605 ✓	44		1

CCR264SS3-3	Purchased	No	250	Each	459.0000	2	2		BR 11-10-4.
Cherry Rivet									

Location		Loc Qty	Loc Code	
FP-B		2		
	113973	2		
ST311		457		
	117086 ✓	31		1
	117849 ✓	426		1

ALS4-1032-130	Purchased	No	250	Each	1,416.000	78	78		BR 11-10-4
Insert									

Location		Loc Qty	Loc Code	
ST281		370		
	118386	370		
ST282		1046		
	117717 ✓	54		78.
	118237	736		
	118312	256		

ALS7-1032-130.

Dart Aerospace Ltd

W/O:		WORK ORDER CHANGES					
DATE	STEP	PROCEDURE CHANGE	By	Date	Qty	Approval Chief Eng / Prod Mgr	Approval QC Inspector

Part No: _____ **PAR #:** _____ **Fault Category:** _____ **NCR:** Yes No **DQA:** _____ **Date:** _____

Resolution: _____ **Disposition:** _____ **QA: N/C Closed:** _____ **Date:** _____

NCR:		WORK ORDER NON-CONFORMANCE (NCR)						
DATE	STEP	Description of NC Section A	Corrective Action Section B			Verification Section C	Approval Chief Eng	Approval QC Inspector
			Initial Chief Eng	Action Description Chief Eng	Sign & Date			

NOTE: Date & initial all entries

H:\fFORMS\Quality Assurance\approved QA\NCRWO RevE

Picklist Print

Friday, August 26, 2011 6:47:11 AM

Work Order ID: 73131

Parent Item: D206-642-541

Parent Item Name: Replacement Skidtube

Start Date: 8/26/2011 **Required Date:** 9/9/2011

Start Qty: 1.00 **Required Qty:** 1.00

D3535-15	Manufactured	No	270	Each	9.0000	1	1	BR 11-10-4.
Wearshoe								

Location	Loc Qty	Loc Code	
FP018 73006	9		1
69931	9		

D3535-35	Manufactured	No	270	Each	12.0000	1	1	BR 11-10-4.
Wearshoe								

Location	Loc Qty	Loc Code	
FP018 73311	12		1
65926	1		
67598	1		
70815	10		

D3535-39	Manufactured	No	270	Each	19.0000	1	1	BR 11-10-4.
Wearshoe								

Location	Loc Qty	Loc Code	
FP018	19		
69759	6		
72159	13		1

D3535-23	Manufactured	No	270	Each	18.0000	1	1	BR 11-10-4.
Wearshoe								

Location	Loc Qty	Loc Code	
FP021	18		
70818	8		
71581	10		1

Dart Aerospace Ltd

W/O:		WORK ORDER CHANGES					
DATE	STEP	PROCEDURE CHANGE	By	Date	Qty	Approval Chief Eng / Prod Mgr	Approval QC Inspector

Part No: _____ **PAR #:** _____ **Fault Category:** _____ **NCR:** Yes No **DQA:** _____ **Date:** _____

Resolution: _____ **Disposition:** _____ **QA: N/C Closed:** _____ **Date:** _____

NCR:		WORK ORDER NON-CONFORMANCE (NCR)						
DATE	STEP	Description of NC Section A	Corrective Action Section B			Verification Section C	Approval Chief Eng	Approval QC Inspector
			Initial Chief Eng	Action Description Chief Eng	Sign & Date			

NOTE: Date & initial all entries

H:\fFORMS\Quality Assurance\approved QA\NCRWO RevE

Picklist Print

Friday, August 26, 2011 6:47:11 AM

Work Order ID: 73131

Parent Item: D206-642-541

Parent Item Name: Replacement Skidtube

Start Date: 8/26/2011 **Required Date:** 9/9/2011

Start Qty: 1.00 **Required Qty:** 1.00

D3537-3		Manufactured	No	270	Each	11.0000	1	1	BR 11-10-4.
Wearpad									

Location	Loc Qty	Loc Code	
FP	5		
70481	5		
FP017	6		
35697	1		
72686	5		1

D3537-1		Manufactured	No	270	Each	66.0000	9	9	BR 11-10-4.
Wearpad									

Location	Loc Qty	Loc Code	
FP001 72124.	9		5
69530	9		
FP016	50		
68944	0		
70687	50		
FP017 73395	7		4
69817	5		
70686	2		

AN960C10L	NAS1149C0332R	Purchased	No	270	Each	0.0000	80	80	BR 11-10-4.
washer				118354				80.	
AN960C416	NAS1149C0463R	Purchased	No	270	Each	0.0000	1	1	BR 11-10-4
washer				117735				1	

Dart Aerospace Ltd

W/O:		WORK ORDER CHANGES					
DATE	STEP	PROCEDURE CHANGE	By	Date	Qty	Approval Chief Eng / Prod Mgr	Approval QC Inspector

Part No: _____ **PAR #:** _____ **Fault Category:** _____ **NCR:** Yes No **DQA:** _____ **Date:** _____

Resolution: _____ **Disposition:** _____ **QA: N/C Closed:** _____ **Date:** _____

NCR:		WORK ORDER NON-CONFORMANCE (NCR)						
DATE	STEP	Description of NC Section A	Corrective Action Section B			Verification Section C	Approval Chief Eng	Approval QC Inspector
			Initial Chief Eng	Action Description Chief Eng	Sign & Date			

NOTE: Date & initial all entries

H:\fFORMS\Quality Assurance\approved QA\NCRWO RevE

Picklist Print

Friday, August 26, 2011 6:47:12 AM

Work Order ID: 73131

Parent Item: D206-642-541

Parent Item Name: Replacement Skidtube

Start Date: 8/26/2011 **Required Date:** 9/9/2011

Start Qty: 1.00 **Required Qty:** 1.00

D3672-1 Phenolic Washer	Manufactured	No	270	Each	1,180.000	2	2	BR 11-10-4.

Location		Loc Qty	Loc Code	
ST074		1178		
	64177	182		
	66821	496		2
	72229	500		
ST077		2		
	52505	2		

AN3C4A BOLT	Purchased	No	270	Each	2,125.000	80	80	BR 11-10-4.

Location		Loc Qty	Loc Code	
ST350		2125		
	117313	2		
	117688	36		
	117795	1		
	117872	22		
	118012	20		
	118112	40		
	118451	1000		80
	118628	1004		

AN4C5A BOLT	Purchased	No	270	Each	487.0000	1	1	BR 11-10-4.

Location		Loc Qty	Loc Code	
FP-B		98		
	112243	98		1
ST345		389		
	112243	389		

Dart Aerospace Ltd

W/O:		WORK ORDER CHANGES					
DATE	STEP	PROCEDURE CHANGE	By	Date	Qty	Approval Chief Eng / Prod Mgr	Approval QC Inspector

Part No: _____ **PAR #:** _____ **Fault Category:** _____ **NCR:** Yes No **DQA:** _____ **Date:** _____

Resolution: _____ **Disposition:** _____ **QA: N/C Closed:** _____ **Date:** _____

NCR:		WORK ORDER NON-CONFORMANCE (NCR)						
DATE	STEP	Description of NC Section A	Corrective Action Section B			Verification Section C	Approval Chief Eng	Approval QC Inspector
			Initial Chief Eng	Action Description Chief Eng	Sign & Date			

NOTE: Date & initial all entries

Picklist Print

Friday, August 26, 2011 6:47:12 AM

Work Order ID: 73131

Parent Item: D206-642-541

Parent Item Name: Replacement Skidtube

Start Date: 8/26/2011 **Required Date:** 9/9/2011

Start Qty: 1.00 **Required Qty:** 1.00

D2646 Aft Cap	Manufactured	No		270	Each	93.0000	1	1	BR 11-10-4.

Location		Loc Qty	Loc Code
FP004		46	
	68280	46	
FP006		5	
	62678	5	
FP-4		38	
	70945	1	
	71070	37	
fp5		4	
	71038	4	

D3413-1 Ring	Manufactured	No		270	Each	23.0000	1	1	BR 11-10-4.

Location		Loc Qty	Loc Code
ST420		23	
	66387	1	
	70773	22	

Dart Aerospace Ltd

W/O:		WORK ORDER CHANGES					
DATE	STEP	PROCEDURE CHANGE	By	Date	Qty	Approval Chief Eng / Prod Mgr	Approval QC Inspector

Part No: _____ **PAR #:** _____ **Fault Category:** _____ **NCR:** Yes No **DQA:** _____ **Date:** _____

Resolution: _____ **Disposition:** _____ **QA: N/C Closed:** _____ **Date:** _____

NCR:		WORK ORDER NON-CONFORMANCE (NCR)						
DATE	STEP	Description of NC Section A	Corrective Action Section B			Verification Section C	Approval Chief Eng	Approval QC Inspector
			Initial Chief Eng	Action Description Chief Eng	Sign & Date			

NOTE: Date & initial all entries

H:\fFORMS\Quality Assurance\approved QA\NCRWO RevE

DESIGN	DRAWN BY	DART AEROSPACE USA, INC. PORT HADLOCK, WA
CP	PH	
CHECKED	APPROVED	DRAWING NO. D3274 — REV. D — SHEET 1 OF 4
DATE 06.12.19		TITLE SKIDTUBE ASSEMBLY — SCALE NTS

A	04.03.15	NEW ISSUE
B	04.08.09	MOVE SADDLE HOLE: 42.14 WAS 42.76
C	05.03.16	ADD −043; NEW INSERTS
D	06.12.19	NEW INSERTS, SS WEARSHOE + GASKET

RELEASED
07.02.12
DEO ATTACHED

Qty -041	Qty -043	Part Number	Description
X		**D3274-041**	**SKIDTUBE ASSEMBLY**
	X	**D3274-043**	**SKIDTUBE ASSEMBLY**
1	1	D2600-1-240	EXTRUSION
1	1	D2646	AFT CAP
12	12	D2649	CROSS BOLT SPACER
12	37	D3275-1	CROSS BOLT SPACER
1	1	D3282-041	FLOAT WEB
1	1	D3285-1	CAP
1	1	D3413-1	RING
1	1	D3415-041	NUT PLATE
1	1	D3535-15	WEARSHOE
1	1	D3535-23	WEARSHOE
1	1	D3535-35	WEARSHOE
1	1	D3535-39	WEARSHOE
1	1	D3536-15	GASKET
1	1	D3536-23	GASKET
1	1	D3536-35	GASKET
1	1	D3536-39	GASKET
9	9	D3537-1	WEARPAD
1	1	D3537-3	WEARPAD
78	78	ALS7-1032-130	INSERT (or AKS4-1032-130, ALS4-1032-130, AELS-1032-130)
80	80	AN3C4A	BOLT
1	1	AN4C5A	BOLT
1	1	AN960C416	WASHER
80	80	AN960C10L	WASHER
2	2	CCR264SS3-3	RIVET
2	2	CR3212-4-03	RIVET
2	2	NAS1515H3L	WASHER

1616L #

GENERAL NOTES:

1. TOLERANCES ARE PER DART QSI 018 UNLESS OTHERWISE NOTED.
2. DAMAGE TOLERANCE ON FWD BEND:
   THERE SHOULD BE NO VISIBLE WRINKLES IN THE BEND FROM THE GROUND TO A HEIGHT OF 7 INCHES ABOVE THE GROUND. IT IS ACCEPTABLE TO POLISH OUT GOUGES UP TO 0.020 DEEP IN THE BENT PORTION OF THE TUBE. A MAXIMUM REDUCTION IN DIAMETER OF 0.150" IS ACCEPTABLE IN THE BENT PORTION OF THE TUBE.
3. ALL HOLES DRILLED ON CENTERLINES.
4. BOND D3282-041 FLOAT WEB INTO D3274-1/-3 OUTER TUBE WITH NON-STRUCTURAL SIKAFLEX-241/291 ADHESIVE PER DART QSI 015. ENSURE HOLES LINE-UP.
5. WELDING TO BE DONE PER DART QSI 004.
6. FINISH: - ACID ETCH, ALODINE ASSEMBLY PER DART QSI 005 4.1
   - POWDER COAT WHITE (REF. 4.3.5.1) PER DART QSI 005 4.3
7. DRILL ∅0.297 HOLES FOR ALS7-1032-130 INSERTS USING DT3274-1T2 BEFORE FINISH. INSTALL ALS7-1032-130 INSERTS AFTER FINISH. SEAL WEARSHOE BOLTS WITH SIKAFLEX -241/-291.
8. SPRAY INSIDE OF TUBE WITH A COAT OF LPS LABORATORIES "LPS-3" AFTER FINISH AND INSTALLATION OF INSERTS. COAT ALL EXPOSED FASTENERS WITH LPS LABORATORIES "LPS PROCYON" AFTER FINAL ASSEMBLY, CLEAN EXCESS OFF POWDER COATING WITH MEK DEGREASER.

Copyright © 2004 by DART AEROSPACE USA, INC.
THIS DOCUMENT IS PRIVATE AND CONFIDENTIAL AND IS SUPPLIED ON THE EXPRESS CONDITION THAT IT IS NOT TO BE USED FOR ANY PURPOSE OR COPIED OR COMMUNICATED TO ANY OTHER PERSON WITHOUT WRITTEN PERMISSION FROM DART AEROSPACE USA, INC.

Dart Aerospace Ltd

W/O:		WORK ORDER CHANGES					
DATE	STEP	PROCEDURE CHANGE	By	Date	Qty	Approval Chief Eng / Prod Mgr	Approval QC Inspector

Part No: _____ **PAR #:** _____ **Fault Category:** _____ **NCR:** Yes No **DQA:** _____ **Date:** _____

Resolution: _____ **Disposition:** _____ **QA: N/C Closed:** _____ **Date:** _____

NCR:		WORK ORDER NON-CONFORMANCE (NCR)						
DATE	STEP	Description of NC Section A	Corrective Action Section B			Verification Section C	Approval Chief Eng	Approval QC Inspector
			Initial Chief Eng	Action Description Chief Eng	Sign & Date			

NOTE: Date & initial all entries

H:\fFORMS\Quality Assurance\approved QA\NCRWO RevE

DEO ATTACHED

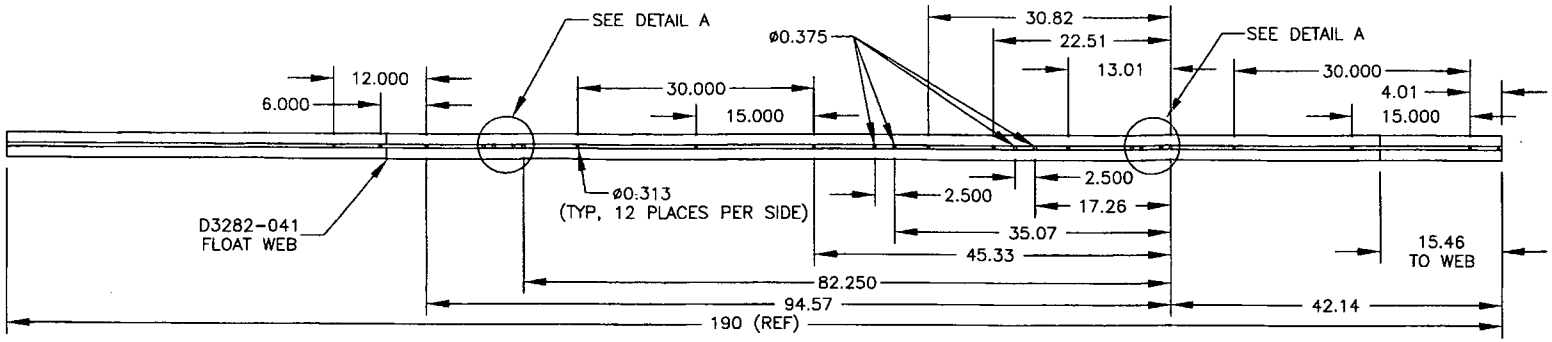

D3274-041 DRILLING/ASSEMBLY DETAIL

1813L #

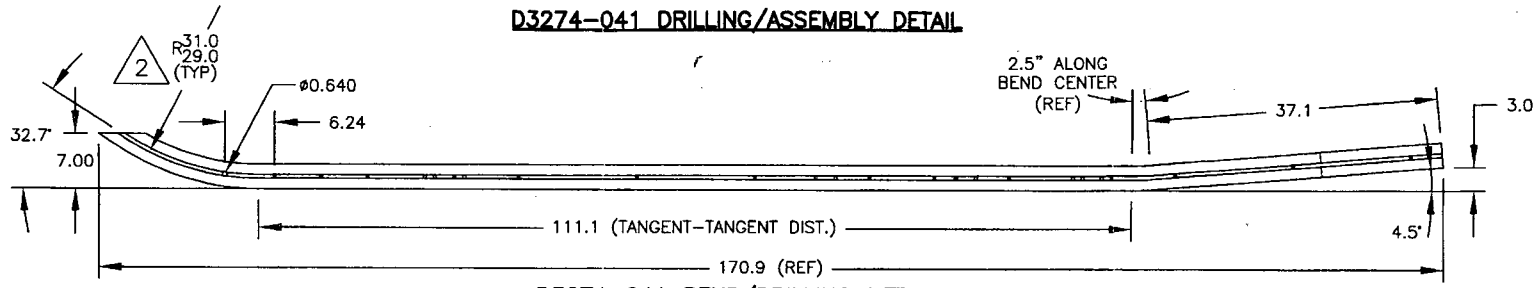

D3274-041 BEND/DRILLING DETAIL

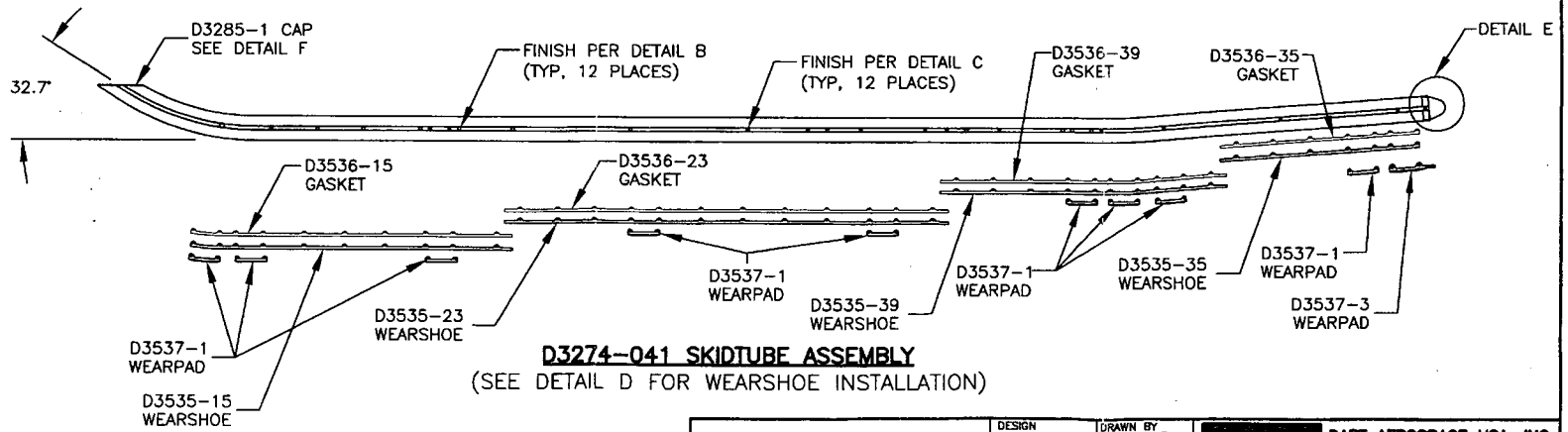

D3274-041 SKIDTUBE ASSEMBLY

(SEE DETAIL D FOR WEARSHOE INSTALLATION)

RELEASED
07.02.12

COPYRIGHT © 2004 BY DART AEROSPACE USA, INC.

THIS DOCUMENT IS PRIVATE AND CONFIDENTIAL AND IS SUPPLIED ON THE EXPRESS CONDITION THAT IT IS NOT TO BE USED FOR ANY PURPOSE OR COPIED OR COMMUNICATED TO ANY OTHER PERSON WITHOUT WRITTEN PERMISSION FROM DART AEROSPACE USA, INC.

DESIGN CP	DRAWN BY PH	DART	DART AEROSPACE USA, INC. PORT HADLOCK, WA
CHECKED #	APPROVED #	DRAWING NO. D3274	REV. D SHEET 2 OF 4
DATE 06.12.19		TITLE SKIDTUBE ASSEMBLY	SCALE 1:15

Dart Aerospace Ltd

W/O:		WORK ORDER CHANGES					
DATE	STEP	PROCEDURE CHANGE	By	Date	Qty	Approval Chief Eng / Prod Mgr	Approval QC Inspector

Part No: _____ **PAR #:** _____ **Fault Category:** _____ **NCR:** Yes No **DQA:** _____ **Date:** _____

Resolution: _____ **Disposition:** _____ **QA: N/C Closed:** _____ **Date:** _____

NCR:		WORK ORDER NON-CONFORMANCE (NCR)						
DATE	STEP	Description of NC Section A	Corrective Action Section B			Verification Section C	Approval Chief Eng	Approval QC Inspector
			Initial Chief Eng	Action Description Chief Eng	Sign & Date			

NOTE: Date & initial all entries

DEO ATTACHED

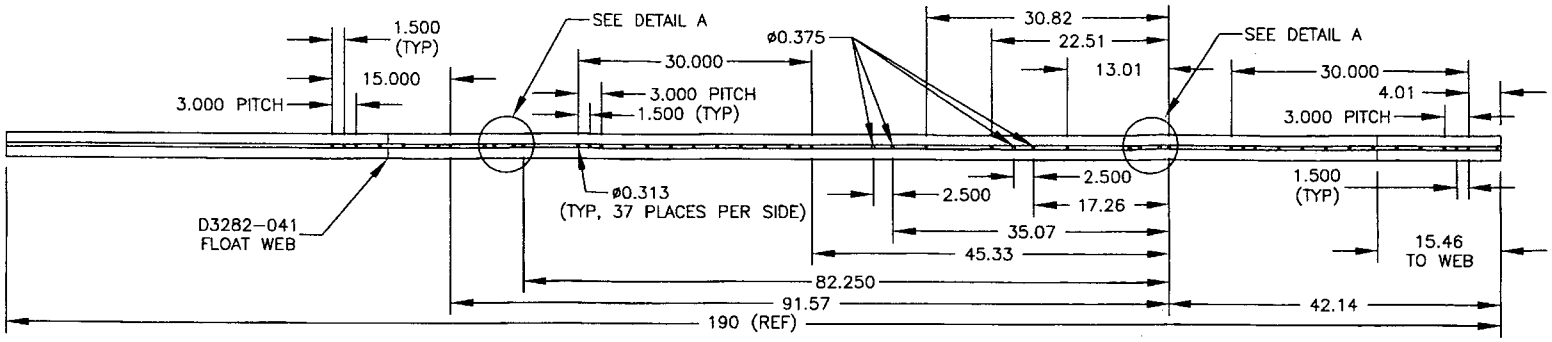

D3274-043 DRILLING/ASSEMBLY DETAIL

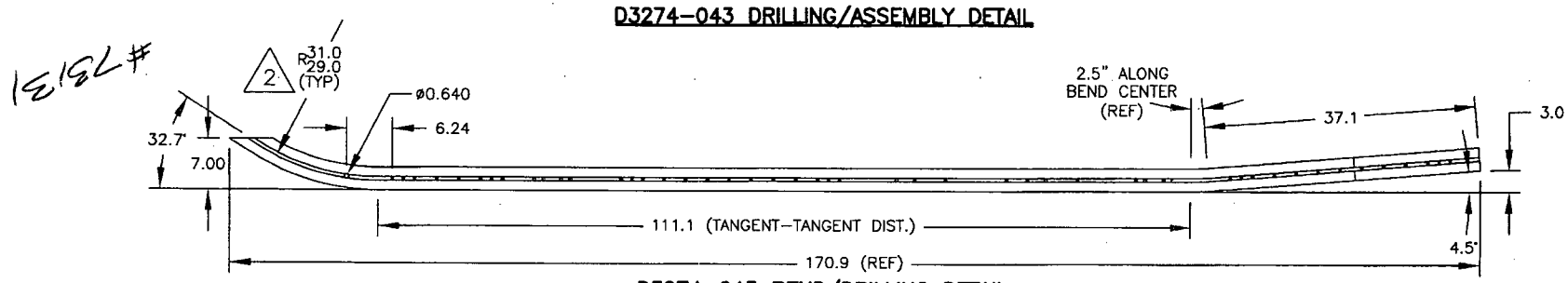

D3274-043 BEND/DRILLING DETAIL

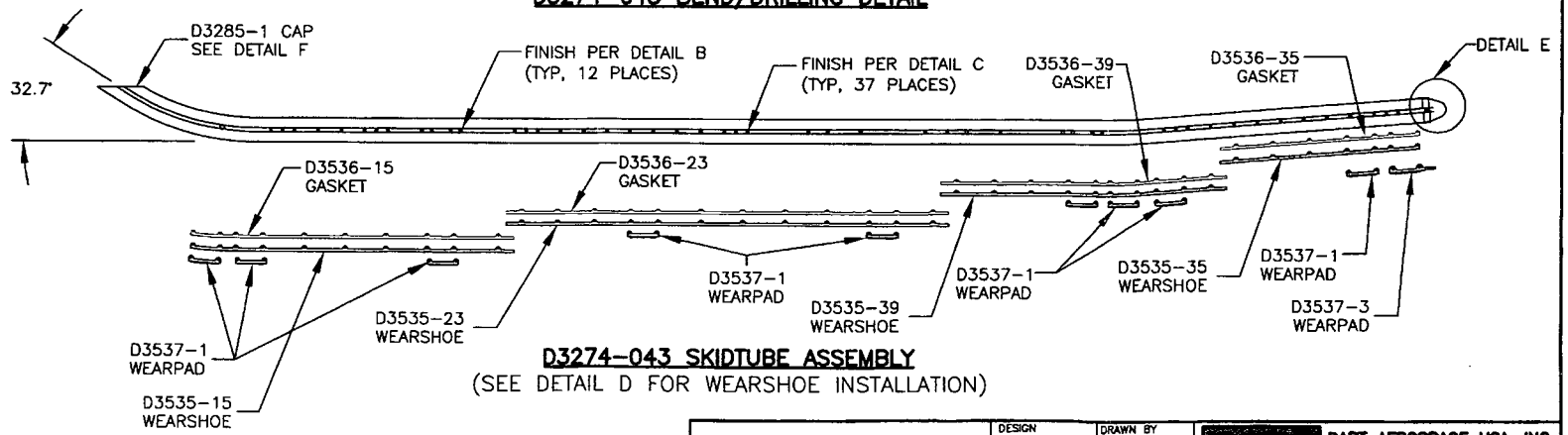

D3274-043 SKIDTUBE ASSEMBLY
(SEE DETAIL D FOR WEARSHOE INSTALLATION)

RELEASED
07.02.12

COPYRIGHT © 2004 BY DART AEROSPACE USA, INC.
THIS DOCUMENT IS PRIVATE AND CONFIDENTIAL AND IS SUPPLIED ON THE EXPRESS CONDITION THAT IT IS NOT TO BE USED FOR ANY PURPOSE OR COPIED OR COMMUNICATED TO ANY OTHER PERSON WITHOUT WRITTEN PERMISSION FROM DART AEROSPACE USA, INC.

DESIGN CP	DRAWN BY PH	DART AEROSPACE USA, INC. PORT HADLOCK, WA	
CHECKED	APPROVED	DRAWING NO. D3274	REV. D SHEET 3 OF 4
DATE 06.12.19		TITLE SKIDTUBE ASSEMBLY	SCALE 1:15

Dart Aerospace Ltd

W/O:		WORK ORDER CHANGES					
DATE	STEP	PROCEDURE CHANGE	By	Date	Qty	Approval Chief Eng / Prod Mgr	Approval QC Inspector

Part No: _____ **PAR #:** _____ **Fault Category:** _____ **NCR:** Yes No **DQA:** _____ **Date:** _____

Resolution: _____ **Disposition:** _____ **QA: N/C Closed:** _____ **Date:** _____

NCR:		WORK ORDER NON-CONFORMANCE (NCR)						
DATE	STEP	Description of NC Section A	Corrective Action Section B			Verification Section C	Approval Chief Eng	Approval QC Inspector
			Initial Chief Eng	Action Description Chief Eng	Sign & Date			

NOTE: Date & initial all entries

DETAIL A: DRILL DETAIL

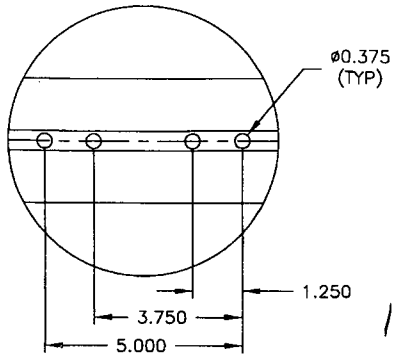

DETAIL B
FOR ø0.375 HOLES ONLY

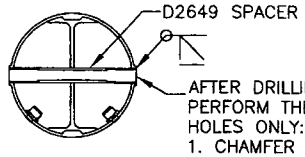

AFTER DRILLING AND BENDING ASSEMBLY PERFORM THE FOLLOWING FOR ø0.375 HOLES ONLY:
1. CHAMFER HOLE 0.030x45°
2. INSERT D2649 SPACER
3. WELD INTO PLACE AND GRIND FLUSH
4. C'BORE TO ø0.313x0.75 DEEP

DETAIL C
FOR ø0.313 HOLES ONLY

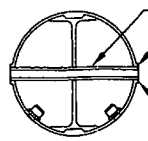

DETAIL D

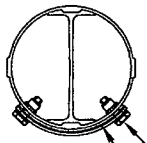

ALS7-1032-130 INSERT (1)
AN3C4A BOLT (1)
AN960C10L WASHER (1)
(78 PLACES)

GASKET/WEARSHOE/WEARPAD (REF)

DETAIL F: END FINISHING DETAIL

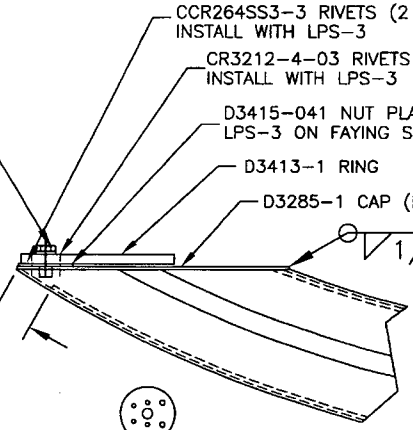

CCR264SS3-3 RIVETS (2 PLACES)
INSTALL WITH LPS-3

CR3212-4-03 RIVETS (2 PLACES)
INSTALL WITH LPS-3

AN4C5A BOLT (1)
AN960C416 WASHER (1)
INSTALL WITH SIKAFLEX-241/-291

D3415-041 NUT PLATE,
LPS-3 ON FAYING SURFACE, LPS HARDCOAT ON EXTERIOR

D3413-1 RING

D3285-1 CAP (REF)

DEO ATTACHED

RELEASED
07.02.12

DETAIL F NOTES
1. CUT TUBE LEVEL
2. REMOVE RIDGE ON FWD SIDE
3. LOCATE D3285-1 (TRIM AS NECESSARY)
4. WELD D3285-1 IN PLACE PER DART QSI 004
5. GRIND FLUSH
6. RIVET D3415-041 NUT PLATE IN PLACE

NOTE: MASK THREADS IN D3415-041 PRIOR TO FINISH

DETAIL E

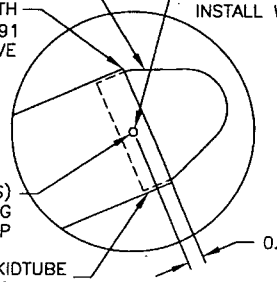

AN3C4A BOLT (1)
AN960C10L WASHER (1)
NAS1515H3L WASHER (1)
(2 PLACES)
INSTALL WITH SIKAFLEX-241/-291

COPYRIGHT © 2004 BY DART AEROSPACE USA, INC.

THIS DOCUMENT IS PRIVATE AND CONFIDENTIAL AND IS SUPPLIED ON THE EXPRESS CONDITION THAT IT IS NOT TO BE USED FOR ANY PURPOSE OR COPIED OR COMMUNICATED TO ANY OTHER PERSON WITHOUT WRITTEN PERMISSION FROM DART AEROSPACE USA, INC.

DESIGN: CP	DRAWN BY: PH	DART AEROSPACE USA, INC. PORT HADLOCK, WA	
CHECKED:	APPROVED:	DRAWING NO.: D3274	REV. D
DATE: 06.12.19		TITLE: SKIDTUBE ASSEMBLY	SHEET 4 OF 4 / SCALE 1:3

Dart Aerospace Ltd

W/O:		WORK ORDER CHANGES					
DATE	STEP	PROCEDURE CHANGE	By	Date	Qty	Approval Chief Eng / Prod Mgr	Approval QC Inspector

Part No: _____ **PAR #:** _____ **Fault Category:** _____ **NCR:** Yes No **DQA:** _____ **Date:** _____

Resolution: _____ **Disposition:** _____ **QA: N/C Closed:** _____ **Date:** _____

NCR:		WORK ORDER NON-CONFORMANCE (NCR)						
DATE	STEP	Description of NC Section A	Corrective Action Section B			Verification Section C	Approval Chief Eng	Approval QC Inspector
			Initial Chief Eng	Action Description Chief Eng	Sign & Date			

NOTE: Date & initial all entries

H:\FORMS\Quality Assurance\approved QA\NCRWO RevE

DRAWING NO.	TITLE	REV. D	DART AEROSPACE USA, INC	D.E.O. NO.	SHEET NO.	SCALE
D3274	SKIDTUBE ASSEMBLY		ENGINEERING ORDER	D3274-D-1	SHEET 1 OF 1	NTS
DRAWN	CHECKED		MFG. APPR.	APPROVED	DE APPR.	
DATE 09.06.17	DATE 09.06.23		DATE 09/06/23	DATE 09/06/23	DATE 09.06.23	

LPS-3 IS NO LONGER USED DURING ASSEMBLY OF SKIDTUBE.

AMEND NOTE 8: "~~SPRAY INSIDE OF TUBE WITH A COAT OF LPS LABORATORIES 'LPS 3' AFTER FINISH AND INSTALLATION OF INSERTS.~~ COAT ALL EXPOSED FASTENERS WITH LPS LABORATORIES 'LPS PROCYON' AFTER FINAL ASSEMBLY, CLEAN EXCESS OFF POWDER COATING WITH MEK DEGREASER."

AMEND DETAIL F AS SHOWN:

ISEL #

DETAIL F: END FINISHING DETAIL

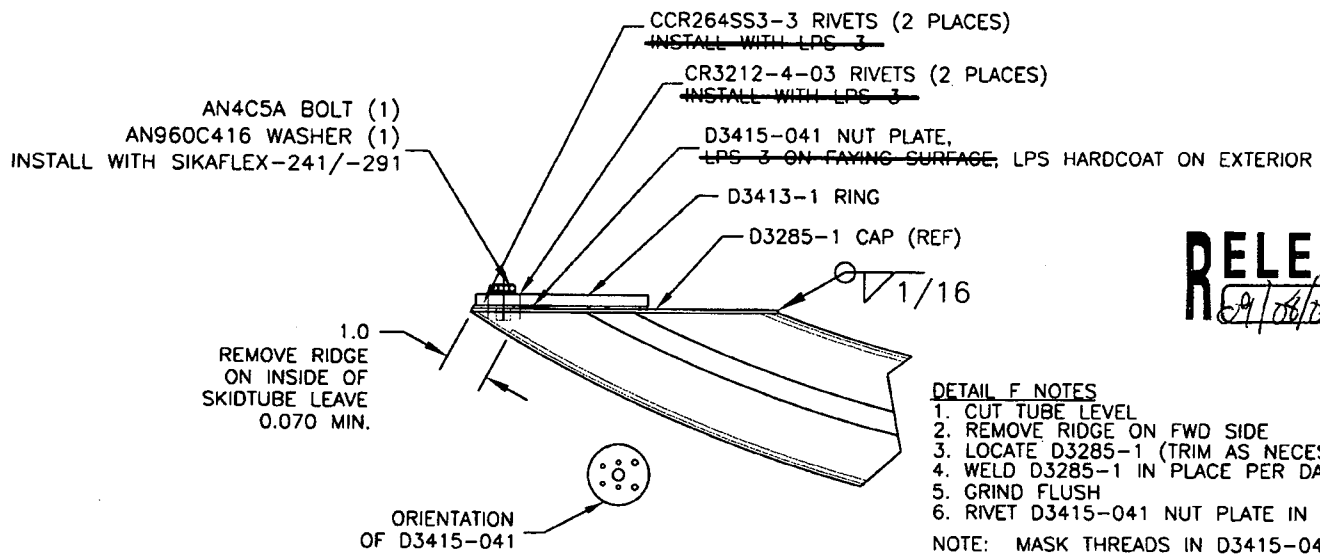

RELEASED 09/06/23

DETAIL F NOTES
1. CUT TUBE LEVEL
2. REMOVE RIDGE ON FWD SIDE
3. LOCATE D3285-1 (TRIM AS NECESSARY)
4. WELD D3285-1 IN PLACE PER DART QSI 004
5. GRIND FLUSH
6. RIVET D3415-041 NUT PLATE IN PLACE

NOTE: MASK THREADS IN D3415-041 PRIOR TO FINISH

COPYRIGHT © 2009 BY DART AEROSPACE USA, INC.
THIS DOCUMENT IS PRIVATE AND CONFIDENTIAL AND IS SUPPLIED ON THE EXPRESS CONDITION THAT IT IS NOT TO BE USED FOR ANY PURPOSE OR COPIED OR COMMUNICATED TO ANY OTHER PERSON WITHOUT WRITTEN PERMISSION FROM DART AEROSPACE USA, INC.

Dart Aerospace Ltd

W/O:	WORK ORDER CHANGES						
DATE	STEP	PROCEDURE CHANGE	By	Date	Qty	Approval Chief Eng / Prod Mgr	Approval QC Inspector

Part No: _____ **PAR #:** _____ **Fault Category:** _____ **NCR:** Yes No **DQA:** _____ **Date:** _____

Resolution: _____ **Disposition:** _____ **QA: N/C Closed:** _____ **Date:** _____

NCR:	WORK ORDER NON-CONFORMANCE (NCR)							
DATE	STEP	Description of NC Section A	Corrective Action Section B			Verification Section C	Approval Chief Eng	Approval QC Inspector
			Initial Chief Eng	Action Description Chief Eng	Sign & Date			

NOTE: Date & initial all entries

H:\FORMS\Quality Assurance\approved QA\NCRWO RevE

NO. 267

AWS D17.1.2001
QUALIFICATION TEST RECORD

Name: Pat Ewers
Job number: 73212
Part number: A206-642-541
Description: Skidtube
Welding Process: Tig[✓] Mig[ ]
Base materiel: Aluminum
Current: AC[✓] DC[ ]

TEST REQUIREMENTS AND RESULTS

Visual:	pass[✓]	fail[ ]
Penetration:	pass[✓]	fail[ ]

UNACCEPTABLE

Cracks:	pass[✓]	fail[ ]
Undercut:	pass[✓]	fail[ ]
Pin holes:	pass[✓]	fail[ ]
Overlap (cold lap)	pass[✓]	fail[ ]
Porosity (surface):	pass[✓]	fail[ ]
Coloration:	pass[✓]	fail[ ]

Qualifier David Aural **Date of Test Coupon** 11.09.26

Welder Pat Ewers **Date of Test Coupon** 11.09.26

The above named individual is qualified in accordance with AWS D17.1.2001 to weld

Dart Aerospace Ltd

W/O:		WORK ORDER CHANGES					
DATE	STEP	PROCEDURE CHANGE	By	Date	Qty	Approval Chief Eng / Prod Mgr	Approval QC Inspector

Part No: _____ **PAR #:** _____ **Fault Category:** _____ **NCR:** Yes No **DQA:** _____ **Date:** _____

Resolution: _____ **Disposition:** _____ **QA: N/C Closed:** _____ **Date:** _____

NCR:		WORK ORDER NON-CONFORMANCE (NCR)						
DATE	STEP	Description of NC Section A	Corrective Action Section B			Verification Section C	Approval Chief Eng	Approval QC Inspector
			Initial Chief Eng	Action Description Chief Eng	Sign & Date			

NOTE: Date & initial all entries

H:\fFORMS\Quality Assurance\approved QA\NCRWO RevE